ALPHA & OMEGA SEMICONDUCTOR

AOTF780A70NL

700V, aMOS5™ N-Channel Power Transistor

General Description

- Proprietary αMOS5™ technology
- Low $R_{DS(ON)}$
- Optimized switching parameters for better EMI performance
- Enhanced body diode for robustness and fast reverse recovery

Applications

- PFC and PWM stages (Flyback, LLC) of Adapter, PC Silverbox,Server,Gaming Power Supply,Industrial, TV,Lighting

Product Summary

V_{DS} @ $T_{j,max}$	800V
I_{DM}	28A
$R_{DS(ON),max}$	< 0.78Ω
$Q_{g,typ}$	11.5nC
E_{oss} @ 400V	1.4μJ

100% UIS Tested
100% R_g Tested

Green Product

TO-220FNL

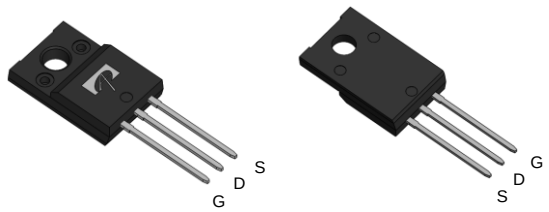

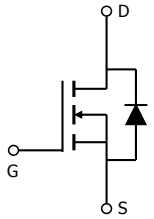

Orderable Part Number	Package Type	Form	Minimum Order Quantity
AOTF780A70NL	TO220FNL	Tube	1000

Absolute Maximum Ratings T_A=25°C unless otherwise noted

Parameter		Symbol	Maximum	Units
Drain-Source Voltage		V_{DS}	700	V
Gate-Source Voltage		V_{GS}	±20	V
Gate-Source Voltage (dynamic) AC(f>1Hz)		V_{GS}	±30	V
Continuous Drain Current	T_C=25°C	I_D	7*	A
	T_C=100°C		4.5*	
Pulsed Drain Current [C]		I_{DM}	28	
Avalanche Current [C] L=1mH		I_{AR}	1.7	A
Repetitive avalanche energy [C]		E_{AR}	1.5	mJ
Single pulsed avalanche energy [G]		E_{AS}	11	mJ
MOSFET dv/dt ruggedness		dv/dt	100	V/ns
Peak diode recovery dv/dt			20	
Power Dissipation [B]	T_C=25°C	P_D	25	W
	Derate above 25°C		0.2	W/°C
Junction and Storage Temperature Range		T_J, T_{STG}	-55 to 150	°C
Maximum lead temperature for soldering purpose, 1/8" from case for 5 seconds		T_L	300	°C

Thermal Characteristics

Parameter	Symbol	Maximum	Units
Maximum Junction-to-Ambient [A,D]	$R_{\theta JA}$	65	°C/W
Maximum Junction-to-Case	$R_{\theta JC}$	5.0	°C/W

* Drain current limited by maximum junction temperature.

Electrical Characteristics (T_J=25°C unless otherwise noted)

Symbol	Parameter	Conditions	Min	Typ	Max	Units
STATIC PARAMETERS						
BV_{DSS}	Drain-Source Breakdown Voltage	I_D=250µA, V_{GS}=0V, T_J=25°C	700			V
		I_D=250µA, V_{GS}=0V, T_J=150°C		800		
BV_{DSS} /ΔTJ	Breakdown Voltage Temperature Coefficient	I_D=250µA, V_{GS}=0V		0.56		V/ °C
I_{DSS}	Zero Gate Voltage Drain Current	V_{DS}=700V, V_{GS}=0V			1	µA
		V_{DS}=560V, T_J=125°C			10	
I_{GSS}	Gate-Body leakage current	V_{DS}=0V, V_{GS}=±20V			±100	nA
$V_{GS(th)}$	Gate Threshold Voltage	V_{DS}=5V, I_D=250µA	2.9	3.5	4.1	V
$R_{DS(ON)}$	Static Drain-Source On-Resistance	V_{GS}=10V, I_D=1.4A		0.7	0.78	Ω
g_{FS}	Forward Transconductance	V_{DS}=10V, I_D=1.4A		3		S
V_{SD}	Diode Forward Voltage	I_S=1.4A,V_{GS}=0V		0.8	1.2	V
I_S	Maximum Body-Diode Continuous Current				7	A
I_{SM}	Maximum Body-Diode Pulsed Current [C]				28	A
DYNAMIC PARAMETERS						
C_{iss}	Input Capacitance	V_{GS}=0V, V_{DS}=100V, f=1MHz		675		pF
C_{oss}	Output Capacitance			18		pF
$C_{o(er)}$	Effective output capacitance, energy related [H]	V_{GS}=0V, V_{DS}=0 to 400V, f=1MHz		16.5		pF
$C_{o(tr)}$	Effective output capacitance, time related [I]			72		pF
C_{rss}	Reverse Transfer Capacitance	V_{GS}=0V, V_{DS}=100V, f=1MHz		1.8		pF
R_g	Gate resistance	f=1MHz		3.1		Ω
SWITCHING PARAMETERS						
Q_g	Total Gate Charge	V_{GS}=10V, V_{DS}=480V, I_D=3.5A		11.5		nC
Q_{gs}	Gate Source Charge			4.8		nC
Q_{gd}	Gate Drain Charge			2.8		nC
$T_{d(on)}$	Turn-On DelayTime	V_{GS}=10V, V_{DS}=400V, I_D=3.5A, R_G=5Ω		18		ns
T_r	Turn-On Rise Time			9		ns
$T_{d(off)}$	Turn-Off DelayTime			30		ns
T_f	Turn-Off Fall Time			12		ns
T_{rr}	Body Diode Reverse Recovery Time	I_F=3.5A, dI/dt=100A/µs, V_{DS}=400V		230		ns
I_{rm}	Peak Reverse Recovery Current			16.5		A
Q_{rr}	Body Diode Reverse Recovery Charge			2.5		µC

A. The value of $R_{\theta JA}$ is measured with the device in a still air environment with T_A=25° C.
B. The power dissipation P_D is based on $T_{J(MAX)}$=150° C, using junction-to-case thermal resistance, and is more useful in setting the upper dissipation limit for cases where additional heatsinking is used.
C. Repetitive rating, pulse width limited by junction temperature $T_{J(MAX)}$=150° C, Ratings are based on low frequency and duty cycles to keep initial T_J =25° C.
D. The $R_{\theta JA}$ is the sum of the thermal impedance from junction to case $R_{\theta JC}$ and case to ambient.
E. The static characteristics in Figures 1 to 6 are obtained using <300µs pulses, duty cycle 0.5% max.
F. These curves are based on the junction-to-case thermal impedance which is measured with the device mounted to a large heatsink, assuming a maximum junction temperature of $T_{J(MAX)}$=150° C. The SOA curve provides a single pulse rating.
G. L=60mH, I_{AS}=0.6A, R_G=25Ω, Starting T_J=25° C.
H. $C_{o(er)}$ is a fixed capacitance that gives the same stored energy as C_{oss} while V_{DS} is rising from 0 to 80% $V_{(BR)DSS}$.
I. $C_{o(tr)}$ is a fixed capacitance that gives the same charging time as C_{oss} while V_{DS} is rising from 0 to 80% $V_{(BR)DSS}$.

APPLICATIONS OR USES AS CRITICAL COMPONENTS IN LIFE SUPPORT DEVICES OR SYSTEMS ARE NOT AUTHORIZED. AOS DOES NOT ASSUME ANY LIABILITY ARISING OUT OF SUCH APPLICATIONS OR USES OF ITS PRODUCTS. AOS RESERVES THE RIGHT TO MAKE CHANGES TO PRODUCT SPECIFICATIONS WITHOUT NOTICE. IT IS THE RESPONSIBILITY OF THE CUSTOMER TO EVALUATE SUITABILITY OF THE PRODUCT FOR THEIR INTENDED APPLICATION. CUSTOMER SHALL COMPLY WITH APPLICABLE LEGAL REQUIREMENTS, INCLUDING ALL APPLICABLE EXPORT CONTROL RULES, REGULATIONS AND LIMITATIONS.

AOS' products are provided subject to AOS' terms and conditions of sale which are set forth at:
http://www.aosmd.com/terms_and_conditions_of_sale

TYPICAL ELECTRICAL AND THERMAL CHARACTERISTICS

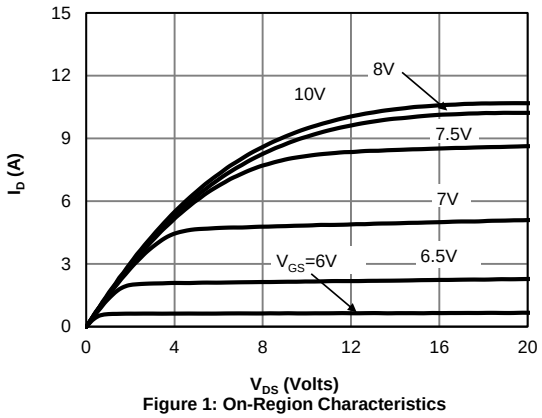

Figure 1: On-Region Characteristics

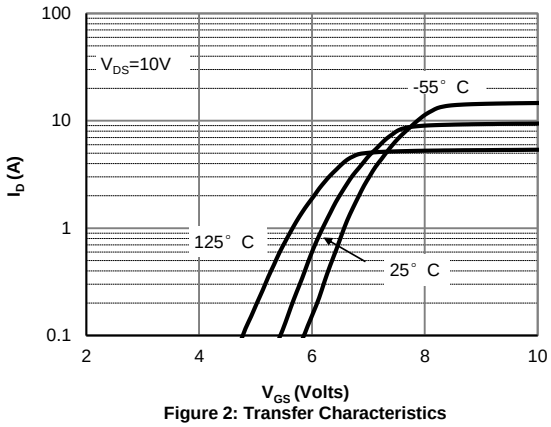

Figure 2: Transfer Characteristics

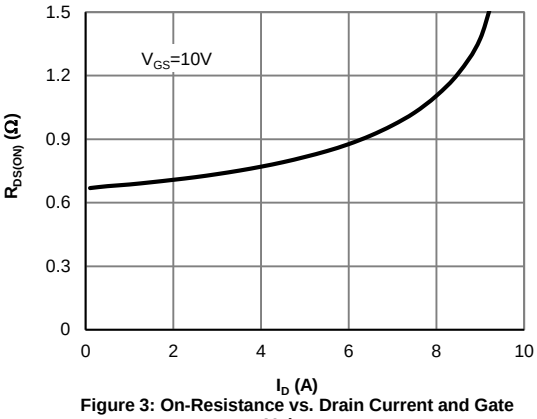

Figure 3: On-Resistance vs. Drain Current and Gate Voltage

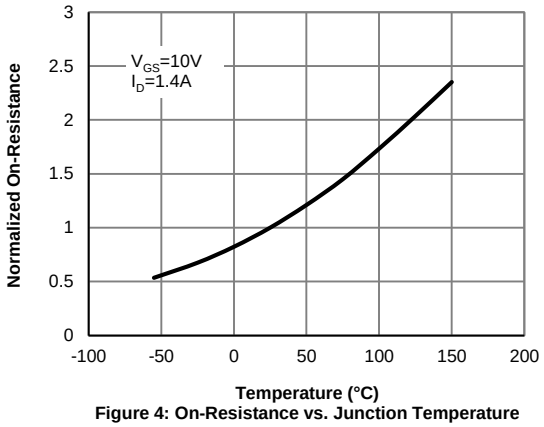

Figure 4: On-Resistance vs. Junction Temperature

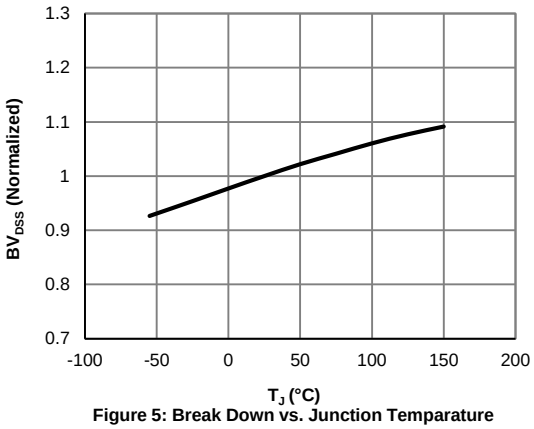

Figure 5: Break Down vs. Junction Temparature

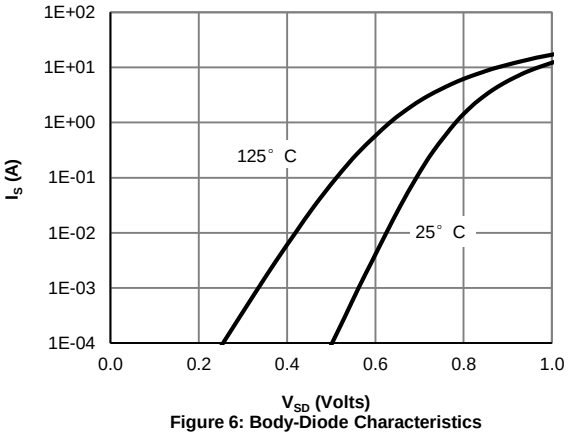

Figure 6: Body-Diode Characteristics

TYPICAL ELECTRICAL AND THERMAL CHARACTERISTICS

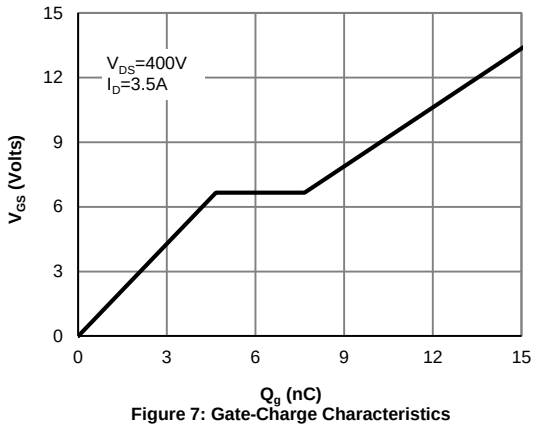

Figure 7: Gate-Charge Characteristics

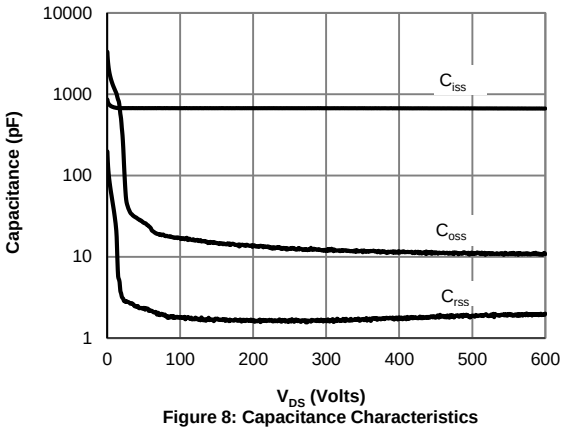

Figure 8: Capacitance Characteristics

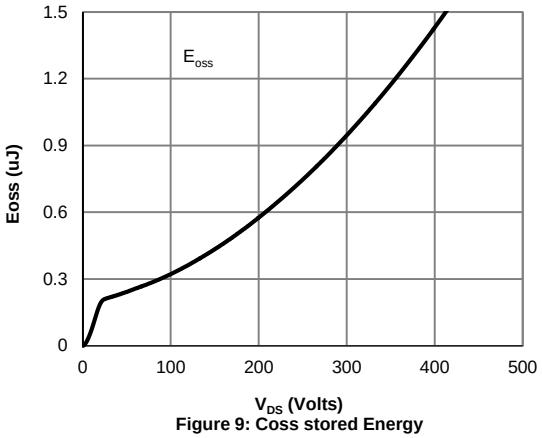

Figure 9: Coss stored Energy

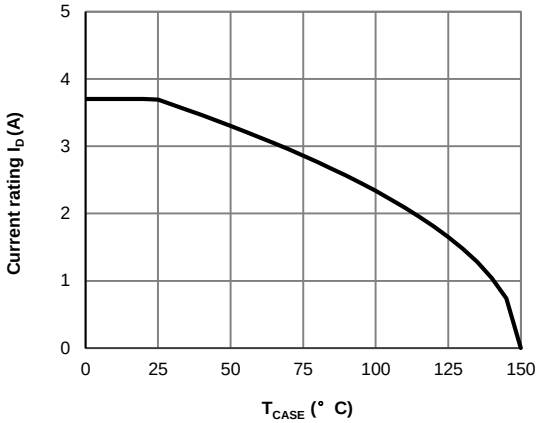

Figure 10: Current De-rating (Note F)

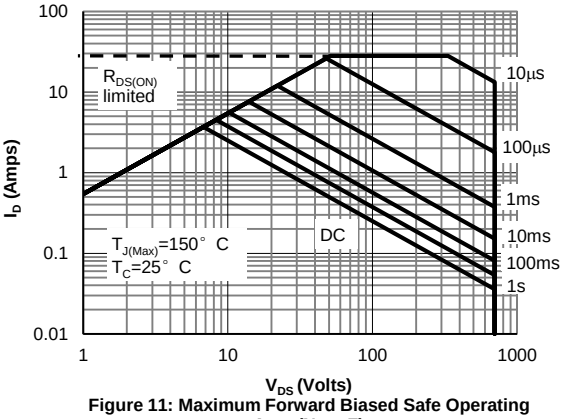

Figure 11: Maximum Forward Biased Safe Operating Area (Note F)

TYPICAL ELECTRICAL AND THERMAL CHARACTERISTICS

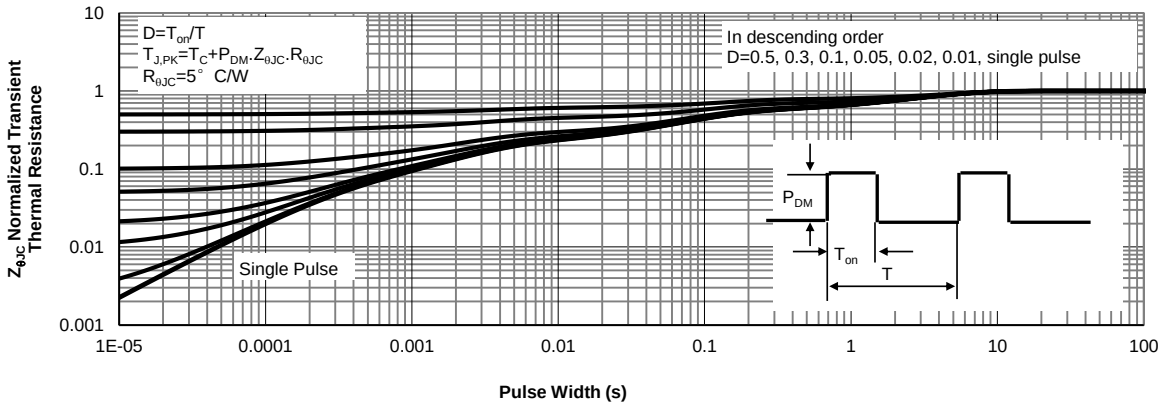

Figure 12: Normalized Maximum Transient Thermal Impedance (Note F)

Gate Charge Test Circuit & Waveform

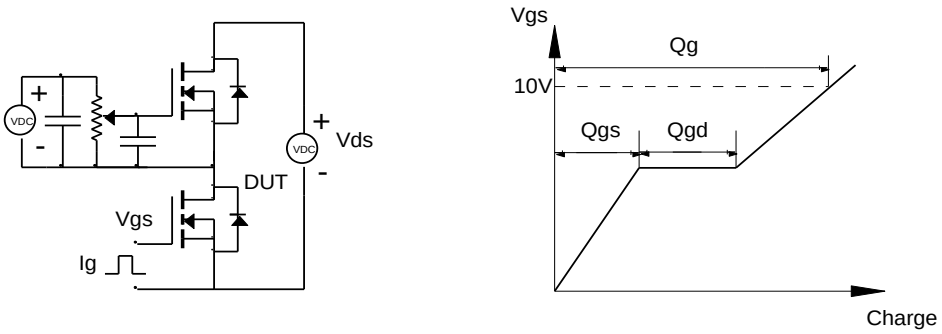

Resistive Switching Test Circuit & Waveforms

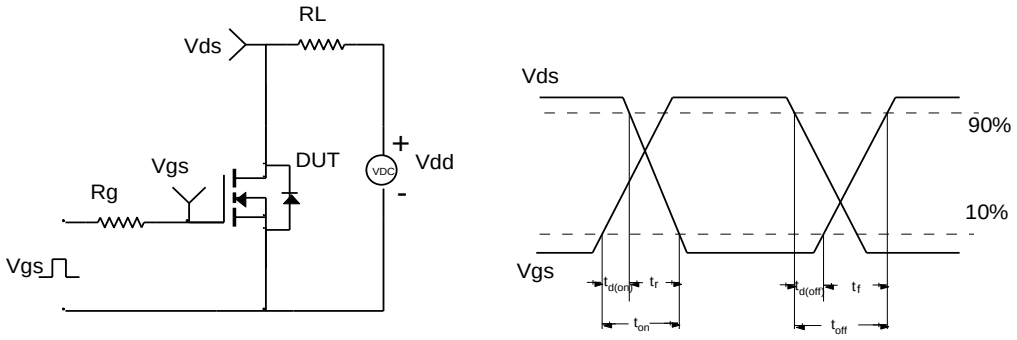

Unclamped Inductive Switching (UIS) Test Circuit & Waveforms

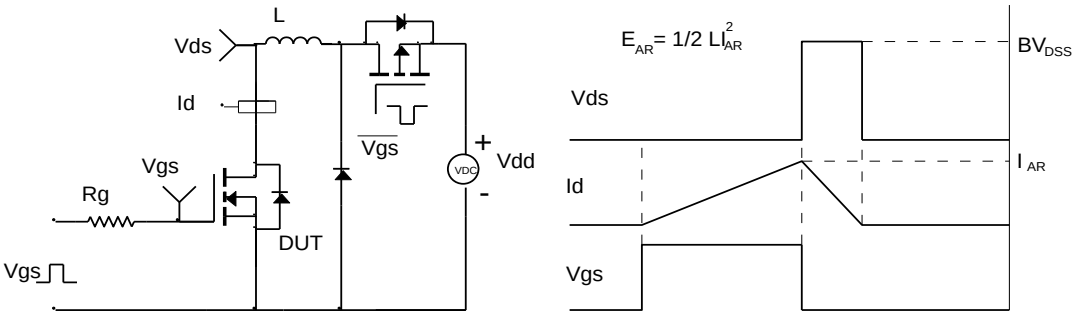
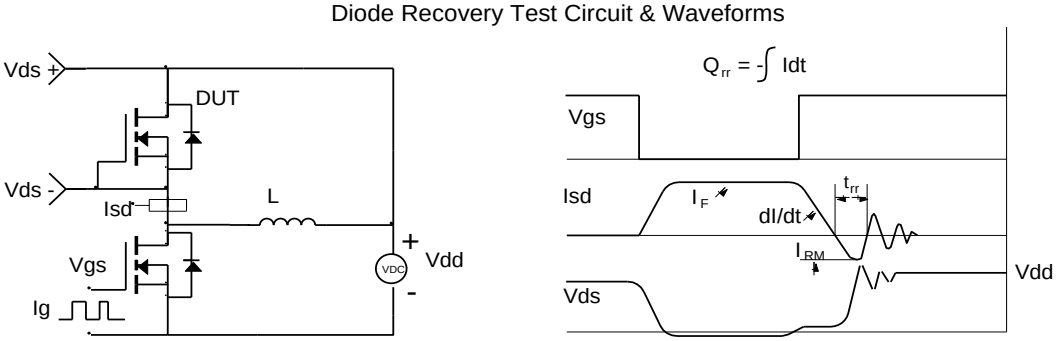
Diode Recovery Test Circuit & Waveforms