AOZ7648QI-16

Secondary Side Control Super Transient Response Converter

General Description

The AOZ7648QI-16 is a secondary side control flyback converter with super transient control scheme. It supports I2C command for fine accuracy adjustable constant voltage regulation and constant current regulation function.

A proprietary constant ON time (COT) control with input feed-forward compensation for fast transient response and good stability.

The device features include multiple protection functions such as V_{DD} under-voltage lockout (UVLO), output under-voltage protection (UVP), output over-voltage protection (OVP) and internal over-temperature protection (OTP).

The AOZ7648QI-16 is available in a 6mm×6mm QFN-38L package.

Features

- Secondary side CV/CC control
- 100kHz maximum switching frequency
- Constant ON time control with feed-forward compensation
- No loop compensation components required
- Fast output voltage transient response
- Include SSCG (Spread Spectrum Clock Generator) function
- Self-check path of TX/RX transmission function
- Integrated synchronous rectifier
- Include I2C communication Function
- Output under-voltage and over-voltage protection
- Internal over-temperature protection
- Thermally enhanced 38-pin 6x6 QFN

Applications

- Smart charger
- Adapter
- TV and monitor applications
- Open frame power supply

Green Product

Typical Application

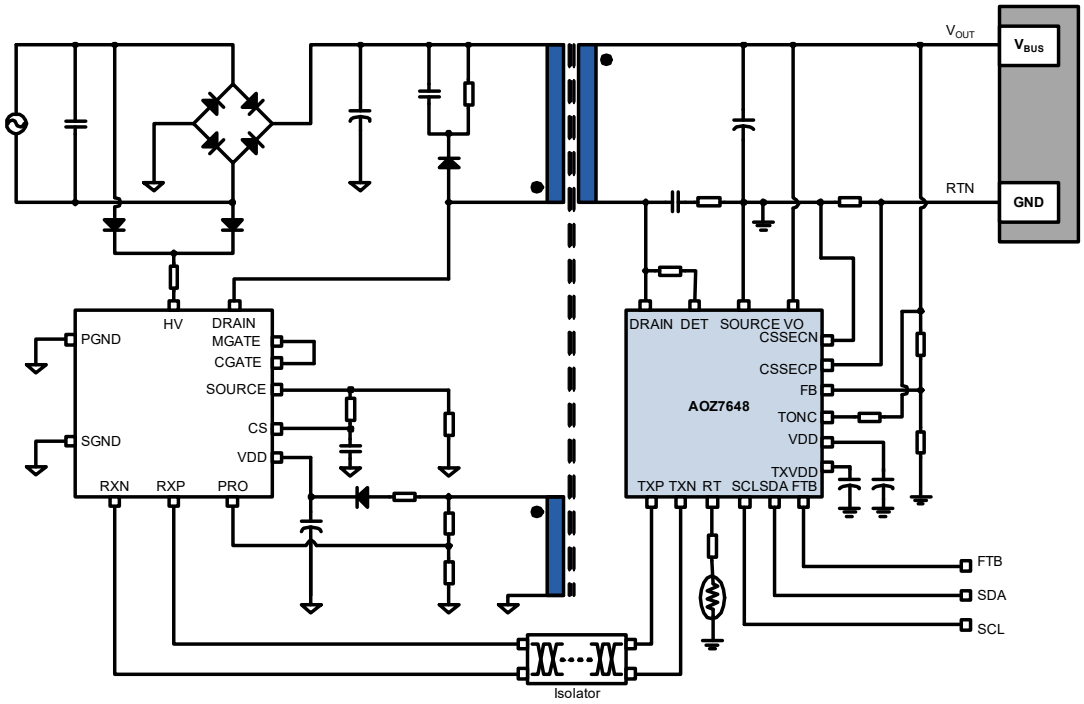

Ordering Information

Part Number	Ambient Temperature Range	Package	Environmental
AOZ7648QI-16	-40°C to +125°C	QFN 6X6-38L	Green Product

AOS Green Products use reduced levels of Halogens, and are also RoHS compliant. Please visit

Pin Configuration

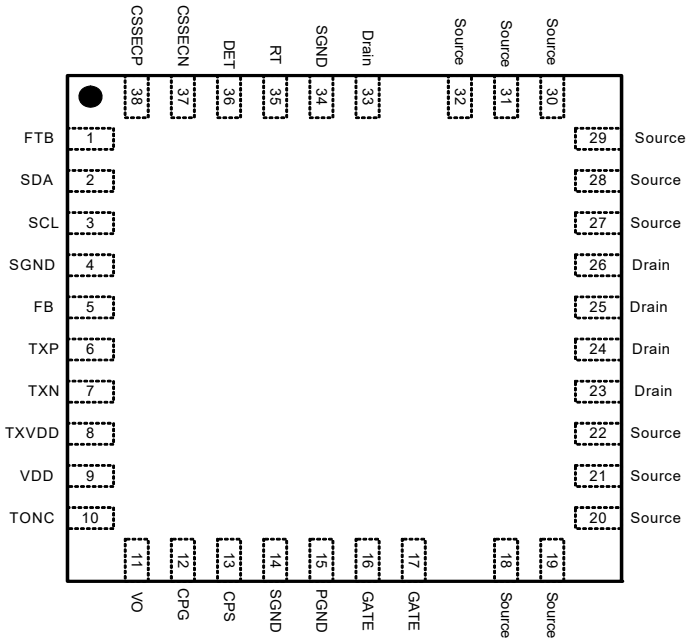

38-Pin 6mmx6mm QFN
(Top View)

Pin Description

Pin Number	Pin Name	Pin Function
1	FTB	Fault bar for fault protection signal output.
2	SDA	I^2C data signal.
3	SCL	I^2C clock signal.
4, 14, 34	SGND	Signal ground.
5	FB	Feedback input pin.
6	TXP	ON time information transmitter pin.
7	TXN	ON time information transmitter pin.
8	TXVDD	Output of 3.6V linear regulator. The TXVDD is the supply pin to the transmission circuitry.
9	VDD	The VDD is the bias-supply pin to the controller.
10	TONC	On time compensation.
11	VO	Output voltage sensing pin and supports converter power.
12	CPG	Connect to the gate of load switch N-type MOSFET.
13	CPS	Connect to the source of load switch N-type MOSFET.
15	PGND	Power ground.
16, 17	GATE	Gate driver output for synchronous rectifier MOSFET.
18, 19, 20, 21, 22, 27, 28, 29, 30, 31, 32	SOURCE	Source of the synchronous rectifier MOSFET.
23, 24, 25, 26, 33	DRAIN	Drain of the synchronous rectifier MOSFET.
35	RT	External thermal protection setting.
36	DET	The drain voltage of SR MOSFET detection pin.
37	CSSECN	Current sense pin.
38	CSSECP	Current sense pin.

Absolute Maximum Ratings

Exceeding the Absolute Maximum Ratings may damage the device.

Parameter	Rating
V_{DS}	-0.7V to 100V
V_O, V_{CPG}, V_{CPS}	-0.3V to 26V
V_{DD}, V_{GATE}, V_{TXVDD}, V_{TONC}, V_{FB}, $V_{CS-SECP}$, V_{CSSECN}, V_{DET}, V_{RT}, V_{TXP}, V_{TXN}	-0.3V to 7V
V_{FTB}, V_{SDA}, V_{SCL}	-0.3V to 7V
Junction Temperature (T_J)	+150°C
Storage Temperature (T_S)	-65°C to +150°C
ESD HBM(1)	2.5kV
ESD CDM(1)	1kV
Avalanche Energy	9.0mJ
V_{DS} Spike(2)	120V

Notes:

1. Devices are inherently ESD sensitive, handling precautions are required. Human body model rating: 1.5kΩ in series with 100pF.

2. The V_{DS} Spike duty cycle must < 5% max and spike width < 10µs(max) in every frequency period, limited by junction temperature T_J(max)=125°C. Refer to Figure 1.

3. 1x1inch, 2-layer PCB, follow JEDEC standard.

Recommended Operating Conditions

The device is not guaranteed to operate beyond the Maximum Recommended Operating Conditions.

Parameter	Rating
Supply Voltage (V_O)	3V to 21.5V
Ambient Temperature (T_A)	-40°C to +125°C
Package Thermal Resistance	25°C/W(3)

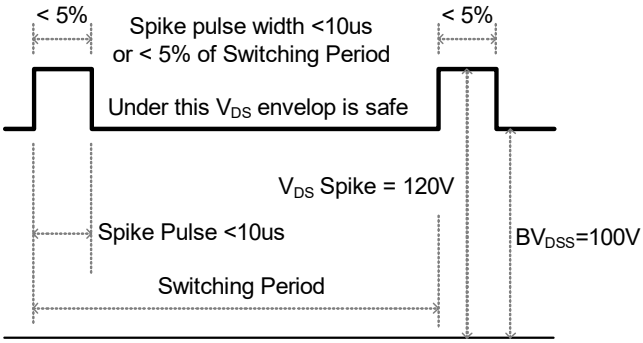

Figure 1. V_{DS} Spike Duty Cycle

Electrical Characteristics

V_O=5V, T_A = -25°C to 85°C, unless otherwise specified.

Symbol	Parameter	Conditions	Min	Typ	Max	Units
MOSFET						
BV_{DSS}(4)	Drain-Source Breakdown Voltage	Force 250µA	100			V
$R_{DS(ON)}$	ON State Resistance	T_A = 25°C, I_D= 1A		9	12	mΩ
VO						
V_{O_OVP}	VO Over-Voltage Protection	No I^2C command	5.7	6.0	6.3	V
t_{O_OVP}(4)	VO OVP Debounce Time	f_S = 100kHz, V_{FB} = 0V		5		µs
V_{O_LDO}	LDO Enable Voltage		5.5	5.6	5.7	V
SUPPLY SECTION						
V_{DD_ON}	Turn-On Threshold Voltage		3.35	3.5	3.65	V
V_{DD_UVLO}	Turn-Off and Under-Voltage Lock-Out		2.65	2.8	2.9	V
V_{DD_LDO}	VDD Regulation Voltage	V_O=8V	5.3	5.4	5.55	V
V_{TXVD-D_LDO}	TXVDD Regulation Voltage		3.1	3.5	3.9	V
I_{DD_ON}	Startup Current		100	200	300	µA
I_{DD_OP}	Operation Current	F_s=100kHz	3	6	9	mA
$I_{DD-SKIP}$	Skip Mode Operation Current	No Switching	1.5	1.8	2.1	mA

Electrical Characteristics *(Continued)*

V_O=5V, T_A = -25°C to 85°C, unless otherwise specified.

Symbol	Parameter	Conditions	Min	Typ	Max	Units
CV/CC CONTROL						
V_{REFV}	Reference Voltage for CV	No I2C command	0.98	1.00	1.02	V
V_{UVP}(4)	CV UVP Level	FB < 60% CV DAC Setting		60		%
t_{VUVP}(4)	CV UVP De-bounce Time			100		µs
V_{REFC}	Reference Voltage for CC	No I2C command	10	11	12	mV
FREQUENCY						
F_{MAX}	Maximum Frequency	$V_{FB} < V_{REF}$, V_{DET} = 2.2V	94	100	106	kHz
D_{MAX}	Maximum Duty	$V_{FB} < V_{REF}$, V_{DET} = 0V	70	75	80	%
CABLE COMPENSATION						
V_{COMP}	Compensation Value	V_{CSSEC} = 10mV, no I2C command	30	35	40	mV
SR DETECTION						
V_{TH_ON}	SR Turn On Threshold		-250	-150	-50	mV
V_{DETZC}	SR Turn OFF Threshold	T_A = 25°C	-16	-10	-5	mV
t_{DSR_ON}(4)	SR Turn-ON Delay Time				100	ns
$t_{SR_ON_MIN}$(4)	SR Minimum Turn-ON Period		800	1000	1200	ns
$t_{SR_ON_INH}$(4)	SR Inhibit Period		650	800	900	ns
ON-TIME REDUCTION						
t_{G_IN}(4)	Enable ON Time Reduction (TONR) Period	Switching period > t_{G_IN}	40	45	50	µs
t_{G_OUT}(4)	Disable ON Time Reduction (TONR) Period	Switching period < t_{G_OUT}	22.5	25	27.5	µs
%_t_{ON}_LV(4)	Percentage of Last Level Period for TONR	t_{ON_LV3} / t_{ON_LV0}	40	50	60	%
ON-TIME						
t_{TX_ON}	Time of TX signal (TXP to TXN)	I_{DET} = 2700µA		1.80		µs
		I_{DET} = 2200µA		2.20		µs
		I_{DET} = 1700µA		2.70		µs
		I_{DET} = 1200µA		3.60		µs
		I_{DET} = 700µA		5.55		µs
t_{OFF_MIN}	Minimum t_{OFF} Period	I_{DET} = 100µA	2.4	3.0	3.6	µs
V_{TXRP}(4)	Level of TX signal	V_O = 5V, w/o pulse transformer	3	3.4	3.8	V
V_{TXRP3V}(4)	Level of TX signal	V_O = 3V, w/o pulse transformer		2		V
EXTERNAL OTP (RT)						
I_{OTP}	Source Current		45	50	55	µA
V_{OTP}(4)	OTP Enable Level			0.5		V
t_{OTP}(4)	Debounce Time		50	60	70	ms

Electrical Characteristics *(Continued)*

V_O=5V, T_A = -25°C to 85°C, unless otherwise specified.

Symbol	Parameter	Conditions	Min	Typ	Max	Units
OVER TEMPERATURE PROTECTION						
	Thermal Shutdown	T_J rising		145		°C
	Thermal Shutdown Recovery Temperature	T_J falling		125		°C
GATE CAPABLE OF CHARGE PUMP						
t_{RISE}	Rising Time	V_{DD-SEC} = 5V, C_L=1nF		100		ns
t_{FALL}	Falling Time	V_{DD-SEC} = 5V, C_L=1nF		50		ns
t_{RISE}	Rising Time	V_{DD-SEC} = 3.5V, C_L=1nF		125		ns
t_{FALL}	Falling Time	V_{DD-SEC} = 3.5V, C_L=1nF		60		ns
V_{CPG}	Driver Voltage Level	V_{DD-SEC} = 5V	4.5	4.75	5.0	V
I^2C (4)(5)(6)						
V_{IL}	LOW Level Input Voltage				0.6	V
V_{IH}	High Level Input Voltage		1.8			V
V_{HYS}	Hysteresis of Schmitt Trigger Inputs		0.11			V
V_{OL}	LOW Level Output Voltage	Open drain, 3mA sink current			0.4	V
t_{SP}	Pulse Width of Spikes Suppressed by Input Filter		32			ns
f_{SCL}	SCL Clock Frequency		100		400	kHz
$t_{HD;STA}$	Hold Time (repeated) START Condition		0.6			µs
t_{LOW}	LOW period of SCL Clock		1.3			µs
t_{HIGH}	High period of SCL Clock		0.6			µs
$t_{SU;STA}$	Set-up Time for a Repeated START Condition		0.6			µs
$t_{HD;DAT}$	Data Hold Time		50		900	ns
$t_{SU;DAT}$	Data Set-up Time		100			ns
t_r	Rise Time (SDA or SCL)		20+0.1 C_b		300	ns
t_r	Fall Time (SDA or SCL)		20+0.1 C_b		300	ns
$t_{SU:STO}$	Set-up Time for STOP Condition		0.6			µs
t_{BUF}	Bus Free Time between STOP & START Condition		1.3			µs
C_b	Capacitive Load of Each Bus Line				400	pF
Fault Bar						
V_{FTBOL}	LOW Level Output Voltage	Open Drain, 3mA Sink Current			0.4	V

Notes:

4. Guaranteed by design.
5. Refer to Figure 2 below for I2C Timing Definitions.
6. Cb= capacitance for bus line in pF.

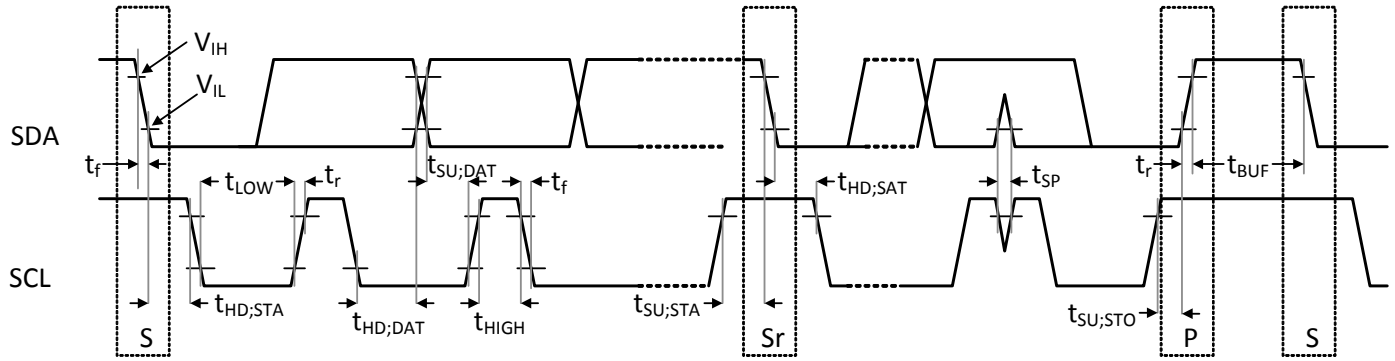

Figure 2. I²C Timing Definitions (reproduced from Phillips I²C specification version 1.1)

Functional Block Diagram

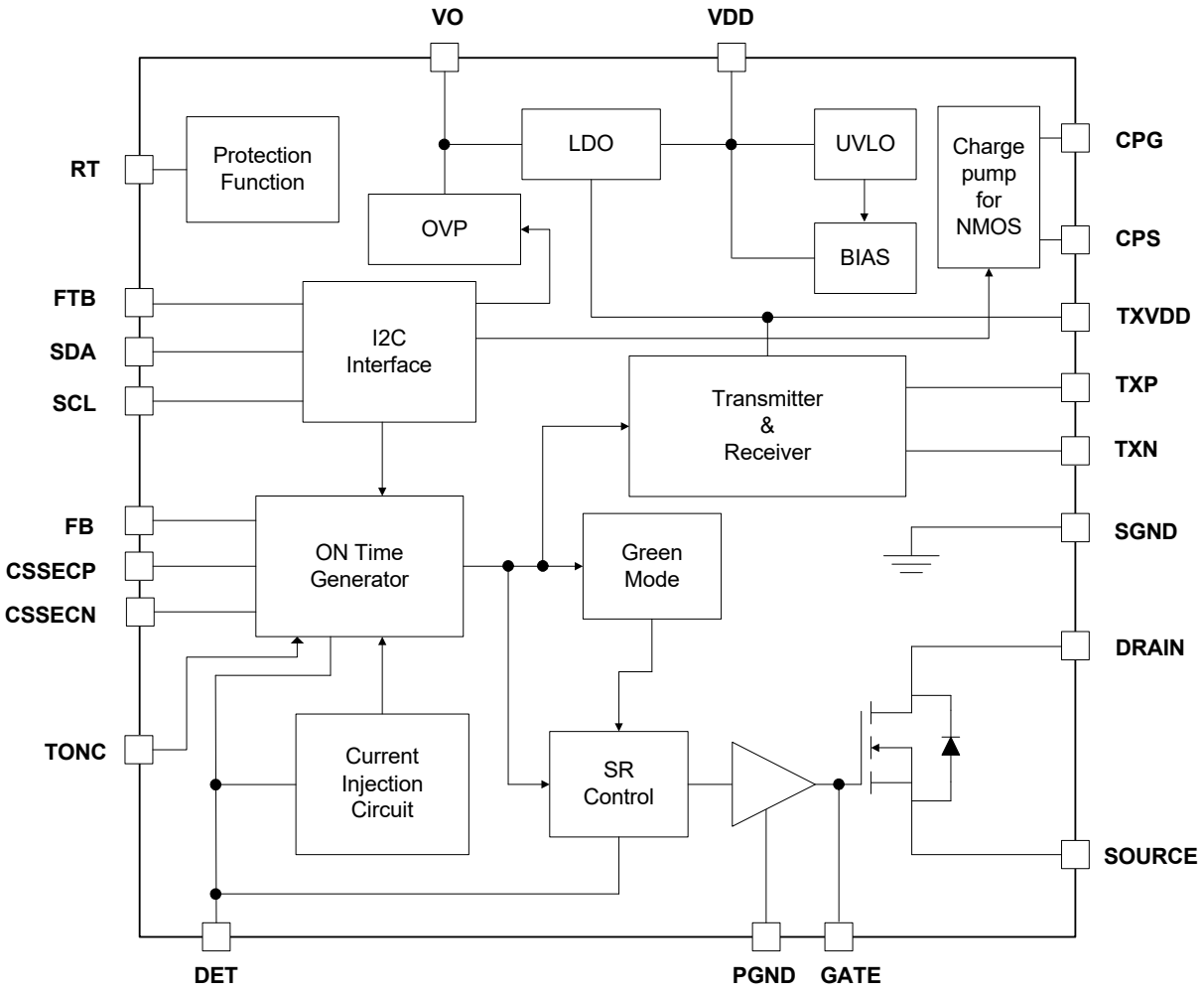

Typical Characteristics

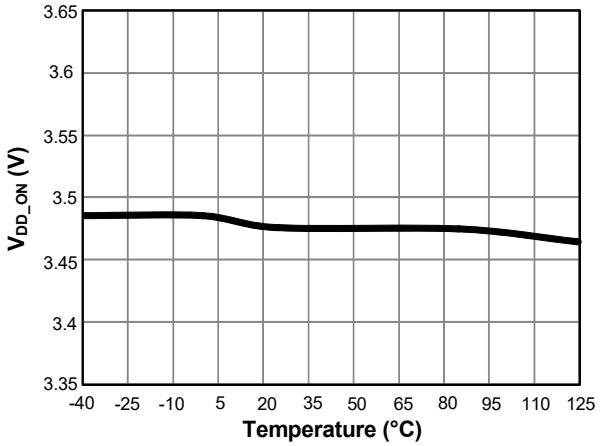

Figure 3. Turn-On Threshold Voltage vs. Temperature

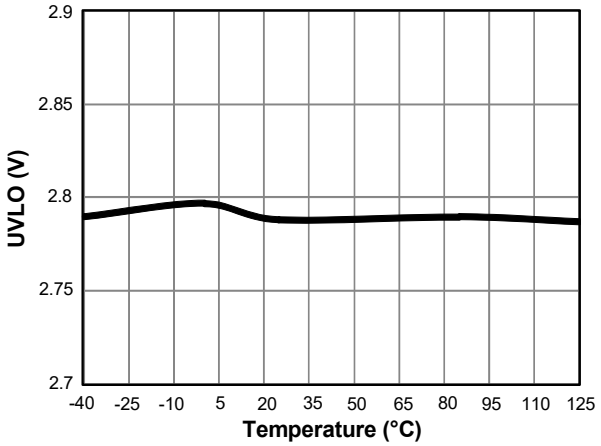

Figure 4. Turn-Off and Under Voltage Lock Out vs. Temperature

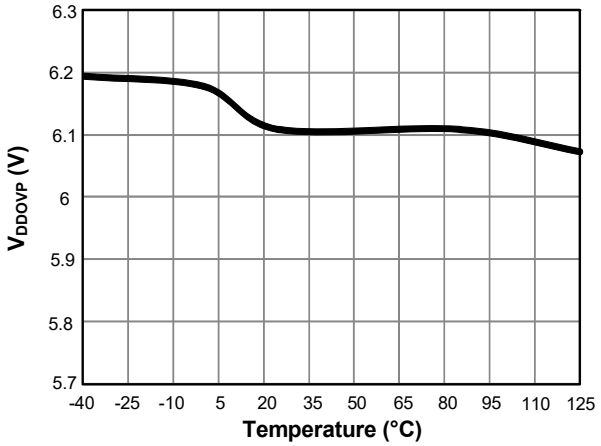

Figure 5. VO Over-Voltage Protection vs. Temperature

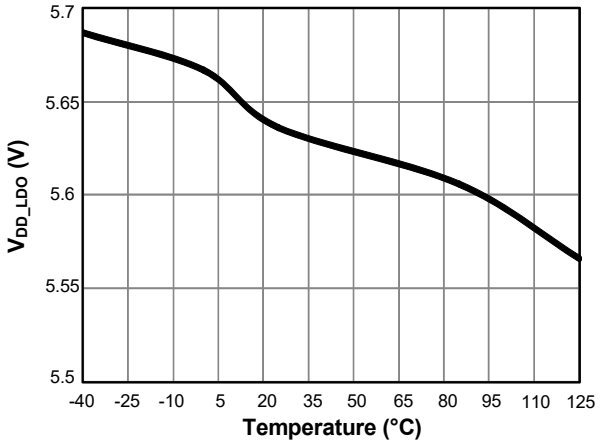

Figure 6. LDO Enable Voltage vs. Temperature

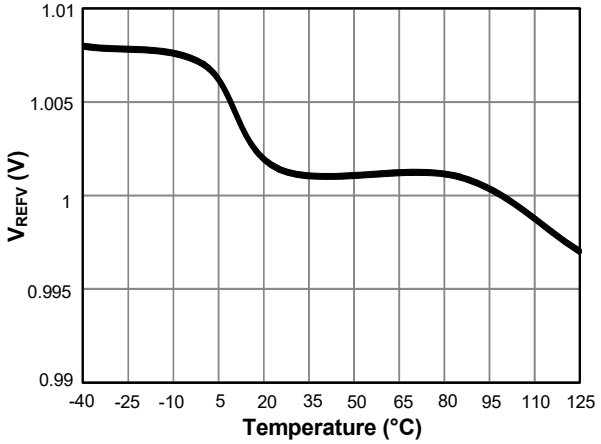

Figure 7. Reference Voltage for CV vs. Temperature

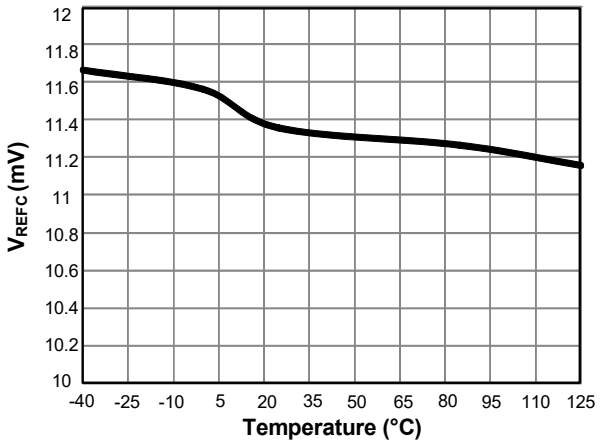

Figure 8. Reference Voltage for CV vs. Temperature

Typical Characteristics

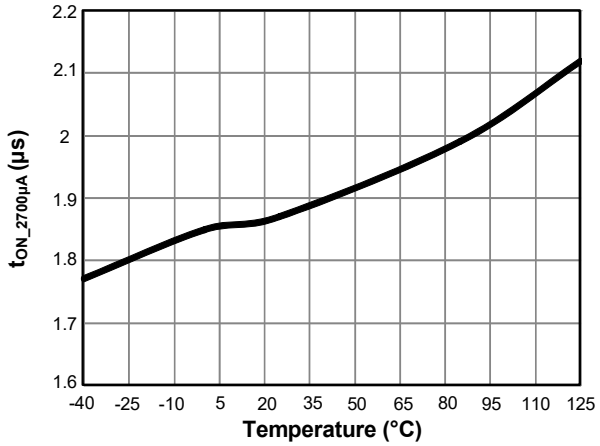

Figure 9. Time of TX signal (TXP to TXN)_2700µA vs. Temperature

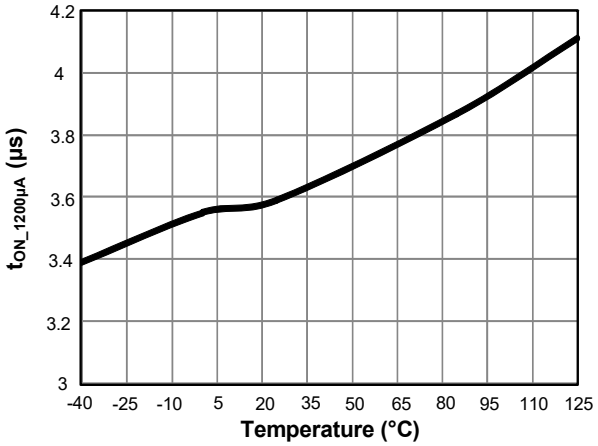

Figure 10. Time of TX signal (TXP to TXN)_1200µA vs. Temperature

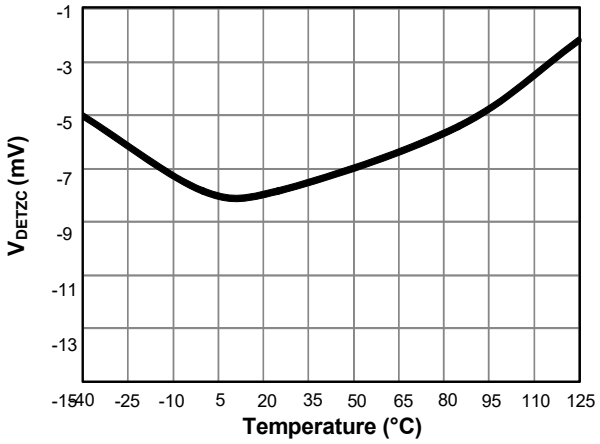

Figure 11. SR Turn-OFF Threshold vs. Temperature

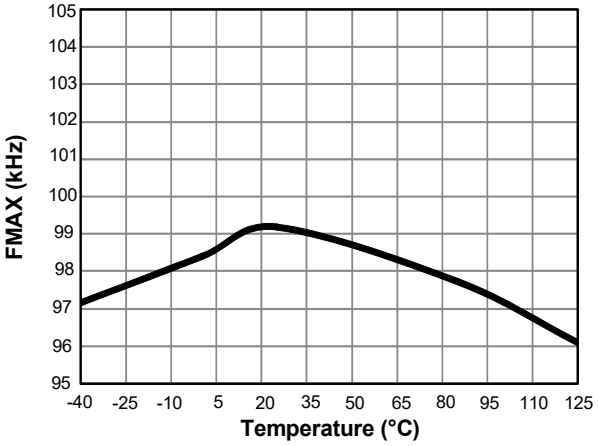

Figure 12. Maximum Frequency vs. Temperature

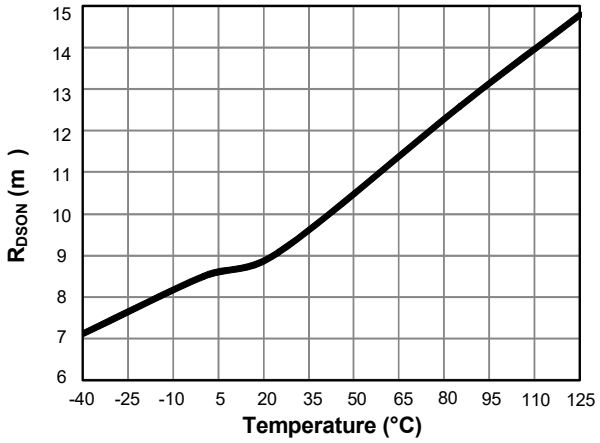

Figure 13. On State Resistance vs. Temperature

Detailed Description

VO Function

The AOZ7648QI-16 integrates two linear regulators that supply the VDD for the internal circuitry and the TXVDD for the transmission circuitry. The VO pin is also used to detect the output voltage. When the VO voltage exceeds the VO OVP level (V_{O_OVP}), the converter will be shut down after the VO OVP debounce time (t_{O_OVP}) and then return to the start state.

Transmission Circuitry Supply

The TXVDD is supplied from the VO pin through an internal linear regulator and regulated at the TXVDD regulation voltage (V_{TXVDD_LDO}). The TXVDD is used to power the transmission circuitry, so it is recommended to add a 1μF capacitor between the TXVDD to PGND terminals.

Constant ON Time Control

The ON time is determined by the current that flow into the DET pin from the DRAIN terminal through a drain sense resistor, and the DET current is dependent on the input voltage, the turns ratio of transformer, the output voltage and the drain sense resistor.

Ripple Injection Circuit

The output filter capacitor must have low enough ESR to meet the output ripple and load transient requirements, but this will reduce the system stability. The AOZ7648QI-16 senses the synchronous MOSFET current and processes it into DC current and AC current information using AOS proprietary technique. The AC current information is decoded and added on the FB pin on phase. With AC current information, the stability of constant ON time control is significantly improved even without the help of output capacitor's ESR.

ON Time Reduction

The switching frequency depends on the output load conditions. When the output load decreases, ON time reduction function will be enabled to reduce ON time. The ON time reduction function provides three ON time reduction level according to the switching period. When the switching period is lower than t_{G_IN}, the ON time will be changed to the next ON time reduction level, the last ON time reduction level is 50% of original ON time. When the switching period is higher than t_{G_OUT}, the ON time will be recovered to previous ON time level. The ON time reduction function is used to reduce audio noise and get better efficiency.

FB Pin Function

This FB pin is used to feedback output voltage, and the CV reference voltage (V_{REFV}) without I2C command is 1.00V. The V_{REFV} can be changed by I2C command. The maximum value of V_{REFV} is 4.2V, and every step is 4mV. When the V_{FB} is lower than the V_{REFV} and the switching period is higher than $1/f_{MAX}$, the AOZ7648QI-16 will transmit the ON time information to the primary side converter.

CSSEC Pin Function

This CSSEC pin is used to feedback output current, and CC reference voltage (V_{REFC}) without I2C command is 10mV. The feedback resistor is determined by

$$R_{CSSEC} = \frac{10mV}{I_{O_CC}}$$

The V_{REFC} can be changed by I2C command. The maximum value of V_{REFC} is 30mV, and every step is 125 μV.

FTB Pin

The FTB pin is an open drain output to be recommended to connect with an external pull up resistor. As long as any protection flag of AOZ7648QI-16 is trigged, the FTB pin is turn-on to pull down FTB bus voltage for protection indication. The external peripheral units can get protection event from FTB pin. While getting protection event, the external peripheral unit is recommended to read protection flag of AOZ7648QI-16 via I2C bus before the AOZ7648QI-16 shut down/reset.

I2C Slave Interface

The I2C Slave-Only interface in the AOZ7648QI-16 is implemented to support standard-mode (100kbps) or fast-mode (400kbps). The I2C interface is composed of the SDA (Data) and SCL (Clock) terminals. The SDA and SCL pins are recommended to be connected with pull-up resistors to 3.3V/5V. The AOZ7648QI-16 is assigned a standard 7-bits I2C slave address of 36h (AD6 to AD0) for write and read access.

AD6 to AD0, W/R (binary)	AD6 to AD0, W/R (hex)	R / W Operation
0110110,0	6Ch	Write
0110110,1	6Dh	Read

Slave Register Description

The AOZ7648QI-16 has five internal registers to be utilized. The Control_A(Reg00) includes four functions to control Cable-Compensation [bit 5:4], Voltage Ripple Injection [bit 3], I2C Enable [bit 2] and Over-Voltage Protection Enable [bit 0]. In addition, Odd_Parity [bit 7] is used to check validity of updated functions.

Since the AOZ7648QI-16 has internal registers to control individual CV/CC DAC references, the external peripheral units can set CV/CC DAC references of the AOZ7648QI-16 via I2C. Maximum codes of CV/CC registers of the AOZ7648QI-16 are given 0x384 and 0xFF, respectively. CV Reference of 10bits DAC is controlled by Vref[9:0] bits in which Control B(Reg01) and Control C(Reg02) provide Vref[7:0] and Vref[9:8]. After CC/CV data of register is update, I2C_Enable [bit2] must be reset to update DAC reference.

The external peripheral unit can work as an I2C master to get protection flags of AOZ7648QI-16. The only-read register Reg04 contains AC_OFF Detection, Under-Voltage Protection (UVP), Over-Voltage Protection (OVP) and Over-Temperature Protection (OTP) flags. Meanwhile, the register 04 is also linked to the FTB pin to ensure that external peripheral unit can take interruption or protection procedure immediately.

I^2C Reference Table (Constant Voltage, V_{FB}: V_{OUT} = 1:5)

code	Hex	Vout	code	Hex	Vout	code	Hex	Vout	code	Hex	Vout
0	0000	3.000	32	0020	3.640	64	0040	4.280	96	0060	4.920
1	0001	3.020	33	0021	3.660	65	0041	4.300	97	0061	4.940
2	0002	3.040	34	0022	3.680	66	0042	4.320	98	0062	4.960
3	0003	3.060	35	0023	3.700	67	0043	4.340	99	0063	4.980
4	0004	3.080	36	0024	3.720	68	0044	4.360	100	0064	5.000
5	0005	3.100	37	0025	3.740	69	0045	4.380	101	0065	5.020
6	0006	3.120	38	0026	3.760	70	0046	4.400	102	0066	5.040
7	0007	3.140	39	0027	3.780	71	0047	4.420	103	0067	5.060
8	0008	3.160	40	0028	3.800	72	0048	4.440	104	0068	5.080
9	0009	3.180	41	0029	3.820	73	0049	4.460	105	0069	5.100
10	000A	3.200	42	002A	3.840	74	004A	4.480	106	006A	5.120
11	000B	3.220	43	002B	3.860	75	004B	4.500	107	006B	5.140
12	000C	3.240	44	002C	3.880	76	004C	4.520	108	006C	5.160
13	000D	3.260	45	002D	3.900	77	004D	4.540	109	006D	5.180
14	000E	3.280	46	002E	3.920	78	004E	4.560	110	006E	5.200
15	000F	3.300	47	002F	3.940	79	004F	4.580	111	006F	5.220
16	0010	3.320	48	0030	3.960	80	0050	4.600	112	0070	5.240
17	0011	3.340	49	0031	3.980	81	0051	4.620	113	0071	5.260
18	0012	3.360	50	0032	4.000	82	0052	4.640	114	0072	5.280
19	0013	3.380	51	0033	4.020	83	0053	4.660	115	0073	5.300
20	0014	3.400	52	0034	4.040	84	0054	4.680	116	0074	5.320
21	0015	3.420	53	0035	4.060	85	0055	4.700	117	0075	5.340
22	0016	3.440	54	0036	4.080	86	0056	4.720	118	0076	5.360
23	0017	3.460	55	0037	4.100	87	0057	4.740	119	0077	5.380
24	0018	3.480	56	0038	4.120	88	0058	4.760	120	0078	5.400
25	0019	3.500	57	0039	4.140	89	0059	4.780	121	0079	5.420
26	001A	3.520	58	003A	4.160	90	005A	4.800	122	007A	5.440
27	001B	3.540	59	003B	4.180	91	005B	4.820	123	007B	5.460
28	001C	3.560	60	003C	4.200	92	005C	4.840	124	007C	5.480
29	001D	3.580	61	003D	4.220	93	005D	4.860	125	007D	5.500
30	001E	3.600	62	003E	4.240	94	005E	4.880	126	007E	5.520
31	001F	3.620	63	003F	4.260	95	005F	4.900	127	007F	5.540

I^2C Reference Table (Constant Voltage, V_{FB}: V_{OUT} = 1:5) *(Continued)*

code	Hex	Vout	code	Hex	Vout	code	Hex	Vout	code	Hex	Vout
128	0080	5.560	160	00A0	6.200	192	00C0	6.840	224	00E0	7.480
129	0081	5.580	161	00A1	6.220	193	00C1	6.860	225	00E1	7.500
130	0082	5.600	162	00A2	6.240	194	00C2	6.880	226	00E2	7.520
131	0083	5.620	163	00A3	6.260	195	00C3	6.900	227	00E3	7.540
132	0084	5.640	164	00A4	6.280	196	00C4	6.920	228	00E4	7.560
133	0085	5.660	165	00A5	6.300	197	00C5	6.940	229	00E5	7.580
134	0086	5.680	166	00A6	6.320	198	00C6	6.960	230	00E6	7.600
135	0087	5.700	167	00A7	6.340	199	00C7	6.980	231	00E7	7.620
136	0088	5.720	168	00A8	6.360	200	00C8	7.000	232	00E8	7.640
137	0089	5.740	169	00A9	6.380	201	00C9	7.020	233	00E9	7.660
138	008A	5.760	170	00AA	6.400	202	00CA	7.040	234	00EA	7.680
139	008B	5.780	171	00AB	6.420	203	00CB	7.060	235	00EB	7.700
140	008C	5.800	172	00AC	6.440	204	00CC	7.080	236	00EC	7.720
141	008D	5.820	173	00AD	6.460	205	00CD	7.100	237	00ED	7.740
142	008E	5.840	174	00AE	6.480	206	00CE	7.120	238	00EE	7.760
143	008F	5.860	175	00AF	6.500	207	00CF	7.140	239	00EF	7.780
144	0090	5.880	176	00B0	6.520	208	00D0	7.160	240	00F0	7.800
145	0091	5.900	177	00B1	6.540	209	00D1	7.180	241	00F1	7.820
146	0092	5.920	178	00B2	6.560	210	00D2	7.200	242	00F2	7.840
147	0093	5.940	179	00B3	6.580	211	00D3	7.220	243	00F3	7.860
148	0094	5.960	180	00B4	6.600	212	00D4	7.240	244	00F4	7.880
149	0095	5.980	181	00B5	6.620	213	00D5	7.260	245	00F5	7.900
150	0096	6.000	182	00B6	6.640	214	00D6	7.280	246	00F6	7.920
151	0097	6.020	183	00B7	6.660	215	00D7	7.300	247	00F7	7.940
152	0098	6.040	184	00B8	6.680	216	00D8	7.320	248	00F8	7.960
153	0099	6.060	185	00B9	6.700	217	00D9	7.340	249	00F9	7.980
154	009A	6.080	186	00BA	6.720	218	00DA	7.360	250	00FA	8.000
155	009B	6.100	187	00BB	6.740	219	00DB	7.380	251	00FB	8.020
156	009C	6.120	188	00BC	6.760	220	00DC	7.400	252	00FC	8.040
157	009D	6.140	189	00BD	6.780	221	00DD	7.420	253	00FD	8.060
158	009E	6.160	190	00BE	6.800	222	00DE	7.440	254	00FE	8.080
159	009F	6.180	191	00BF	6.820	223	00DF	7.460	255	00FF	8.100

I²C Reference Table (Constant Voltage, V_{FB}: V_{OUT} = 1:5) *(Continued)*

code	Hex	Vout	code	Hex	Vout	code	Hex	Vout	code	Hex	Vout
256	0100	8.120	288	0120	8.760	320	0140	9.400	352	0160	10.040
257	0101	8.140	289	0121	8.780	321	0141	9.420	353	0161	10.060
258	0102	8.160	290	0122	8.800	322	0142	9.440	354	0162	10.080
259	0103	8.180	291	0123	8.820	323	0143	9.460	355	0163	10.100
260	0104	8.200	292	0124	8.840	324	0144	9.480	356	0164	10.120
261	0105	8.220	293	0125	8.860	325	0145	9.500	357	0165	10.140
262	0106	8.240	294	0126	8.880	326	0146	9.520	358	0166	10.160
263	0107	8.260	295	0127	8.900	327	0147	9.540	359	0167	10.180
264	0108	8.280	296	0128	8.920	328	0148	9.560	360	0168	10.200
265	0109	8.300	297	0129	8.940	329	0149	9.580	361	0169	10.220
266	010A	8.320	298	012A	8.960	330	014A	9.600	362	016A	10.240
267	010B	8.340	299	012B	8.980	331	014B	9.620	363	016B	10.260
268	010C	8.360	300	012C	9.000	332	014C	9.640	364	016C	10.280
269	010D	8.380	301	012D	9.020	333	014D	9.660	365	016D	10.300
270	010E	8.400	302	012E	9.040	334	014E	9.680	366	016E	10.320
271	010F	8.420	303	012F	9.060	335	014F	9.700	367	016F	10.340
272	0110	8.440	304	0130	9.080	336	0150	9.720	368	0170	10.360
273	0111	8.460	305	0131	9.100	337	0151	9.740	369	0171	10.380
274	0112	8.480	306	0132	9.120	338	0152	9.760	370	0172	10.400
275	0113	8.500	307	0133	9.140	339	0153	9.780	371	0173	10.420
276	0114	8.520	308	0134	9.160	340	0154	9.800	372	0174	10.440
277	0115	8.540	309	0135	9.180	341	0155	9.820	373	0175	10.460
278	0116	8.560	310	0136	9.200	342	0156	9.840	374	0176	10.480
279	0117	8.580	311	0137	9.220	343	0157	9.860	375	0177	10.500
280	0118	8.600	312	0138	9.240	344	0158	9.880	376	0178	10.520
281	0119	8.620	313	0139	9.260	345	0159	9.900	377	0179	10.540
282	011A	8.640	314	013A	9.280	346	015A	9.920	378	017A	10.560
283	011B	8.660	315	013B	9.300	347	015B	9.940	379	017B	10.580
284	011C	8.680	316	013C	9.320	348	015C	9.960	380	017C	10.600
285	011D	8.700	317	013D	9.340	349	015D	9.980	381	017D	10.620
286	011E	8.720	318	013E	9.360	350	015E	10.000	382	017E	10.640
287	011F	8.740	319	013F	9.380	351	015F	10.020	383	017F	10.660

I²C Reference Table (Constant Voltage, V_{FB}: V_{OUT} = 1:5) *(Continued)*

code	Hex	Vout	code	Hex	Vout	code	Hex	Vout	code	Hex	Vout
384	0180	10.680	416	01A0	11.320	448	01C0	11.960	480	01E0	12.600
385	0181	10.700	417	01A1	11.340	449	01C1	11.980	481	01E1	12.620
386	0182	10.720	418	01A2	11.360	450	01C2	12.000	482	01E2	12.640
387	0183	10.740	419	01A3	11.380	451	01C3	12.020	483	01E3	12.660
388	0184	10.760	420	01A4	11.400	452	01C4	12.040	484	01E4	12.680
389	0185	10.780	421	01A5	11.420	453	01C5	12.060	485	01E5	12.700
390	0186	10.800	422	01A6	11.440	454	01C6	12.080	486	01E6	12.720
391	0187	10.820	423	01A7	11.460	455	01C7	12.100	487	01E7	12.740
392	0188	10.840	424	01A8	11.480	456	01C8	12.120	488	01E8	12.760
393	0189	10.860	425	01A9	11.500	457	01C9	12.140	489	01E9	12.780
394	018A	10.880	426	01AA	11.520	458	01CA	12.160	490	01EA	12.800
395	018B	10.900	427	01AB	11.540	459	01CB	12.180	491	01EB	12.820
396	018C	10.920	428	01AC	11.560	460	01CC	12.200	492	01EC	12.840
397	018D	10.940	429	01AD	11.580	461	01CD	12.220	493	01ED	12.860
398	018E	10.960	430	01AE	11.600	462	01CE	12.240	494	01EE	12.880
399	018F	10.980	431	01AF	11.620	463	01CF	12.260	495	01EF	12.900
400	0190	11.000	432	01B0	11.640	464	01D0	12.280	496	01F0	12.920
401	0191	11.020	433	01B1	11.660	465	01D1	12.300	497	01F1	12.940
402	0192	11.040	434	01B2	11.680	466	01D2	12.320	498	01F2	12.960
403	0193	11.060	435	01B3	11.700	467	01D3	12.340	499	01F3	12.980
404	0194	11.080	436	01B4	11.720	468	01D4	12.360	500	01F4	13.000
405	0195	11.100	437	01B5	11.740	469	01D5	12.380	501	01F5	13.020
406	0196	11.120	438	01B6	11.760	470	01D6	12.400	502	01F6	13.040
407	0197	11.140	439	01B7	11.780	471	01D7	12.420	503	01F7	13.060
408	0198	11.160	440	01B8	11.800	472	01D8	12.440	504	01F8	13.080
409	0199	11.180	441	01B9	11.820	473	01D9	12.460	505	01F9	13.100
410	019A	11.200	442	01BA	11.840	474	01DA	12.480	506	01FA	13.120
411	019B	11.220	443	01BB	11.860	475	01DB	12.500	507	01FB	13.140
412	019C	11.240	444	01BC	11.880	476	01DC	12.520	508	01FC	13.160
413	019D	11.260	445	01BD	11.900	477	01DD	12.540	509	01FD	13.180
414	019E	11.280	446	01BE	11.920	478	01DE	12.560	510	01FE	13.200
415	019F	11.300	447	01BF	11.940	479	01DF	12.580	511	01FF	13.220

I2C Reference Table (Constant Voltage, V_{FB}: V_{OUT} = 1:5) *(Continued)*

code	Hex	Vout	code	Hex	Vout	code	Hex	Vout	code	Hex	Vout
512	0200	13.240	544	0220	13.880	576	0240	14.520	608	0260	15.160
513	0201	13.260	545	0221	13.900	577	0241	14.540	609	0261	15.180
514	0202	13.280	546	0222	13.920	578	0242	14.560	610	0262	15.200
515	0203	13.300	547	0223	13.940	579	0243	14.580	611	0263	15.220
516	0204	13.320	548	0224	13.960	580	0244	14.600	612	0264	15.240
517	0205	13.340	549	0225	13.980	581	0245	14.620	613	0265	15.260
518	0206	13.360	550	0226	14.000	582	0246	14.640	614	0266	15.280
519	0207	13.380	551	0227	14.020	583	0247	14.660	615	0267	15.300
520	0208	13.400	552	0228	14.040	584	0248	14.680	616	0268	15.320
521	0209	13.420	553	0229	14.060	585	0249	14.700	617	0269	15.340
522	020A	13.440	554	022A	14.080	586	024A	14.720	618	026A	15.360
523	020B	13.460	555	022B	14.100	587	024B	14.740	619	026B	15.380
524	020C	13.480	556	022C	14.120	588	024C	14.760	620	026C	15.400
525	020D	13.500	557	022D	14.140	589	024D	14.780	621	026D	15.420
526	020E	13.520	558	022E	14.160	590	024E	14.800	622	026E	15.440
527	020F	13.540	559	022F	14.180	591	024F	14.820	623	026F	15.460
528	0210	13.560	560	0230	14.200	592	0250	14.840	624	0270	15.480
529	0211	13.580	561	0231	14.220	593	0251	14.860	625	0271	15.500
530	0212	13.600	562	0232	14.240	594	0252	14.880	626	0272	15.520
531	0213	13.620	563	0233	14.260	595	0253	14.900	627	0273	15.540
532	0214	13.640	564	0234	14.280	596	0254	14.920	628	0274	15.560
533	0215	13.660	565	0235	14.300	597	0255	14.940	629	0275	15.580
534	0216	13.680	566	0236	14.320	598	0256	14.960	630	0276	15.600
535	0217	13.700	567	0237	14.340	599	0257	14.980	631	0277	15.620
536	0218	13.720	568	0238	14.360	600	0258	15.000	632	0278	15.640
537	0219	13.740	569	0239	14.380	601	0259	15.020	633	0279	15.660
538	021A	13.760	570	023A	14.400	602	025A	15.040	634	027A	15.680
539	021B	13.780	571	023B	14.420	603	025B	15.060	635	027B	15.700
540	021C	13.800	572	023C	14.440	604	025C	15.080	636	027C	15.720
541	021D	13.820	573	023D	14.460	605	025D	15.100	637	027D	15.740
542	021E	13.840	574	023E	14.480	606	025E	15.120	638	027E	15.760
543	021F	13.860	575	023F	14.500	607	025F	15.140	639	027F	15.780

I2C Reference Table (Constant Voltage, V_{FB}: V_{OUT} = 1:5) *(Continued)*

code	Hex	Vout	code	Hex	Vout	code	Hex	Vout	code	Hex	Vout
640	0280	15.800	672	02A0	16.440	704	02C0	17.080	736	02E0	17.720
641	0281	15.820	673	02A1	16.460	705	02C1	17.100	737	02E1	17.740
642	0282	15.840	674	02A2	16.480	706	02C2	17.120	738	02E2	17.760
643	0283	15.860	675	02A3	16.500	707	02C3	17.140	739	02E3	17.780
644	0284	15.880	676	02A4	16.520	708	02C4	17.160	740	02E4	17.800
645	0285	15.900	677	02A5	16.540	709	02C5	17.180	741	02E5	17.820
646	0286	15.920	678	02A6	16.560	710	02C6	17.200	742	02E6	17.840
647	0287	15.940	679	02A7	16.580	711	02C7	17.220	743	02E7	17.860
648	0288	15.960	680	02A8	16.600	712	02C8	17.240	744	02E8	17.880
649	0289	15.980	681	02A9	16.620	713	02C9	17.260	745	02E9	17.900
650	028A	16.000	682	02AA	16.640	714	02CA	17.280	746	02EA	17.920
651	028B	16.020	683	02AB	16.660	715	02CB	17.300	747	02EB	17.940
652	028C	16.040	684	02AC	16.680	716	02CC	17.320	748	02EC	17.960
653	028D	16.060	685	02AD	16.700	717	02CD	17.340	749	02ED	17.980
654	028E	16.080	686	02AE	16.720	718	02CE	17.360	750	02EE	18.000
655	028F	16.100	687	02AF	16.740	719	02CF	17.380	751	02EF	18.020
656	0290	16.120	688	02B0	16.760	720	02D0	17.400	752	02F0	18.040
657	0291	16.140	689	02B1	16.780	721	02D1	17.420	753	02F1	18.060
658	0292	16.160	690	02B2	16.800	722	02D2	17.440	754	02F2	18.080
659	0293	16.180	691	02B3	16.820	723	02D3	17.460	755	02F3	18.100
660	0294	16.200	692	02B4	16.840	724	02D4	17.480	756	02F4	18.120
661	0295	16.220	693	02B5	16.860	725	02D5	17.500	757	02F5	18.140
662	0296	16.240	694	02B6	16.880	726	02D6	17.520	758	02F6	18.160
663	0297	16.260	695	02B7	16.900	727	02D7	17.540	759	02F7	18.180
664	0298	16.280	696	02B8	16.920	728	02D8	17.560	760	02F8	18.200
665	0299	16.300	697	02B9	16.940	729	02D9	17.580	761	02F9	18.220
666	029A	16.320	698	02BA	16.960	730	02DA	17.600	762	02FA	18.240
667	029B	16.340	699	02BB	16.980	731	02DB	17.620	763	02FB	18.260
668	029C	16.360	700	02BC	17.000	732	02DC	17.640	764	02FC	18.280
669	029D	16.380	701	02BD	17.020	733	02DD	17.660	765	02FD	18.300
670	029E	16.400	702	02BE	17.040	734	02DE	17.680	766	02FE	18.320
671	029F	16.420	703	02BF	17.060	735	02DF	17.700	767	02FF	18.340

I²C Reference Table (Constant Voltage, V_{FB}: V_{OUT} = 1:5) *(Continued)*

code	Hex	Vout	code	Hex	Vout	code	Hex	Vout	code	Hex	Vout
768	0300	18.360	800	0320	19.000	832	0340	19.640	864	0360	20.280
769	0301	18.380	801	0321	19.020	833	0341	19.660	865	0361	20.300
770	0302	18.400	802	0322	19.040	834	0342	19.680	866	0362	20.320
771	0303	18.420	803	0323	19.060	835	0343	19.700	867	0363	20.340
772	0304	18.440	804	0324	19.080	836	0344	19.720	868	0364	20.360
773	0305	18.460	805	0325	19.100	837	0345	19.740	869	0365	20.380
774	0306	18.480	806	0326	19.120	838	0346	19.760	870	0366	20.400
775	0307	18.500	807	0327	19.140	839	0347	19.780	871	0367	20.420
776	0308	18.520	808	0328	19.160	840	0348	19.800	872	0368	20.440
777	0309	18.540	809	0329	19.180	841	0349	19.820	873	0369	20.460
778	030A	18.560	810	032A	19.200	842	034A	19.840	874	036A	20.480
779	030B	18.580	811	032B	19.220	843	034B	19.860	875	036B	20.500
780	030C	18.600	812	032C	19.240	844	034C	19.880	876	036C	20.520
781	030D	18.620	813	032D	19.260	845	034D	19.900	877	036D	20.540
782	030E	18.640	814	032E	19.280	846	034E	19.920	878	036E	20.560
783	030F	18.660	815	032F	19.300	847	034F	19.940	879	036F	20.580
784	0310	18.680	816	0330	19.320	848	0350	19.960	880	0370	20.600
785	0311	18.700	817	0331	19.340	849	0351	19.980	881	0371	20.620
786	0312	18.720	818	0332	19.360	850	0352	20.000	882	0372	20.640
787	0313	18.740	819	0333	19.380	851	0353	20.020	883	0373	20.660
788	0314	18.760	820	0334	19.400	852	0354	20.040	884	0374	20.680
789	0315	18.780	821	0335	19.420	853	0355	20.060	885	0375	20.700
790	0316	18.800	822	0336	19.440	854	0356	20.080	886	0376	20.720
791	0317	18.820	823	0337	19.460	855	0357	20.100	887	0377	20.740
792	0318	18.840	824	0338	19.480	856	0358	20.120	888	0378	20.760
793	0319	18.860	825	0339	19.500	857	0359	20.140	889	0379	20.780
794	031A	18.880	826	033A	19.520	858	035A	20.160	890	037A	20.800
795	031B	18.900	827	033B	19.540	859	035B	20.180	891	037B	20.820
796	031C	18.920	828	033C	19.560	860	035C	20.200	892	037C	20.840
797	031D	18.940	829	033D	19.580	861	035D	20.220	893	037D	20.860
798	031E	18.960	830	033E	19.600	862	035E	20.240	894	037E	20.880
799	031F	18.980	831	033F	19.620	863	035F	20.260	895	037F	20.900

I^2C Reference Table (Constant Current, R_{CSSEC} = 5mΩ)

code	Hex	Iout	code	Hex	Iout	code	Hex	Iout	code	Hex	Iout
0	0000	0.000	32	0020	0.800	64	0040	1.600	96	0060	2.400
1	0001	0.025	33	0021	0.825	65	0041	1.625	97	0061	2.425
2	0002	0.050	34	0022	0.850	66	0042	1.650	98	0062	2.450
3	0003	0.075	35	0023	0.875	67	0043	1.675	99	0063	2.475
4	0004	0.100	36	0024	0.900	68	0044	1.700	100	0064	2.500
5	0005	0.125	37	0025	0.925	69	0045	1.725	101	0065	2.525
6	0006	0.150	38	0026	0.950	70	0046	1.750	102	0066	2.550
7	0007	0.175	39	0027	0.975	71	0047	1.775	103	0067	2.575
8	0008	0.200	40	0028	1.000	72	0048	1.800	104	0068	2.600
9	0009	0.225	41	0029	1.025	73	0049	1.825	105	0069	2.625
10	000A	0.250	42	002A	1.050	74	004A	1.850	106	006A	2.650
11	000B	0.275	43	002B	1.075	75	004B	1.875	107	006B	2.675
12	000C	0.300	44	002C	1.100	76	004C	1.900	108	006C	2.700
13	000D	0.325	45	002D	1.125	77	004D	1.925	109	006D	2.725
14	000E	0.350	46	002E	1.150	78	004E	1.950	110	006E	2.750
15	000F	0.375	47	002F	1.175	79	004F	1.975	111	006F	2.775
16	0010	0.400	48	0030	1.200	80	0050	2.000	112	0070	2.800
17	0011	0.425	49	0031	1.225	81	0051	2.025	113	0071	2.825
18	0012	0.450	50	0032	1.250	82	0052	2.050	114	0072	2.850
19	0013	0.475	51	0033	1.275	83	0053	2.075	115	0073	2.875
20	0014	0.500	52	0034	1.300	84	0054	2.100	116	0074	2.900
21	0015	0.525	53	0035	1.325	85	0055	2.125	117	0075	2.925
22	0016	0.550	54	0036	1.350	86	0056	2.150	118	0076	2.950
23	0017	0.575	55	0037	1.375	87	0057	2.175	119	0077	2.975
24	0018	0.600	56	0038	1.400	88	0058	2.200	120	0078	3.000
25	0019	0.625	57	0039	1.425	89	0059	2.225	121	0079	3.025
26	001A	0.650	58	003A	1.450	90	005A	2.250	122	007A	3.050
27	001B	0.675	59	003B	1.475	91	005B	2.275	123	007B	3.075
28	001C	0.700	60	003C	1.500	92	005C	2.300	124	007C	3.100
29	001D	0.725	61	003D	1.525	93	005D	2.325	125	007D	3.125
30	001E	0.750	62	003E	1.550	94	005E	2.350	126	007E	3.150
31	001F	0.775	63	003F	1.575	95	005F	2.375	127	007F	3.175

I²C Reference Table (Constant Current, R_{CSSEC} = 5mΩ) *(Continued)*

code	Hex	Iout	code	Hex	Iout	code	Hex	Iout	code	Hex	Iout
128	0080	3.200	160	00A0	4.000	192	00C0	4.800	224	00E0	5.600
129	0081	3.225	161	00A1	4.025	193	00C1	4.825	225	00E1	5.625
130	0082	3.250	162	00A2	4.050	194	00C2	4.850	226	00E2	5.650
131	0083	3.275	163	00A3	4.075	195	00C3	4.875	227	00E3	5.675
132	0084	3.300	164	00A4	4.100	196	00C4	4.900	228	00E4	5.700
133	0085	3.325	165	00A5	4.125	197	00C5	4.925	229	00E5	5.725
134	0086	3.350	166	00A6	4.150	198	00C6	4.950	230	00E6	5.750
135	0087	3.375	167	00A7	4.175	199	00C7	4.975	231	00E7	5.775
136	0088	3.400	168	00A8	4.200	200	00C8	5.000	232	00E8	5.800
137	0089	3.425	169	00A9	4.225	201	00C9	5.025	233	00E9	5.825
138	008A	3.450	170	00AA	4.250	202	00CA	5.050	234	00EA	5.850
139	008B	3.475	171	00AB	4.275	203	00CB	5.075	235	00EB	5.875
140	008C	3.500	172	00AC	4.300	204	00CC	5.100	236	00EC	5.900
141	008D	3.525	173	00AD	4.325	205	00CD	5.125	237	00ED	5.925
142	008E	3.550	174	00AE	4.350	206	00CE	5.150	238	00EE	5.950
143	008F	3.575	175	00AF	4.375	207	00CF	5.175	239	00EF	5.975
144	0090	3.600	176	00B0	4.400	208	00D0	5.200	240	00F0	6.000
145	0091	3.625	177	00B1	4.425	209	00D1	5.225	241	00F1	6.025
146	0092	3.650	178	00B2	4.450	210	00D2	5.250	242	00F2	6.050
147	0093	3.675	179	00B3	4.475	211	00D3	5.275	243	00F3	6.075
148	0094	3.700	180	00B4	4.500	212	00D4	5.300	244	00F4	6.100
149	0095	3.725	181	00B5	4.525	213	00D5	5.325	245	00F5	6.125
150	0096	3.750	182	00B6	4.550	214	00D6	5.350	246	00F6	6.150
151	0097	3.775	183	00B7	4.575	215	00D7	5.375	247	00F7	6.175
152	0098	3.800	184	00B8	4.600	216	00D8	5.400	248	00F8	6.200
153	0099	3.825	185	00B9	4.625	217	00D9	5.425	249	00F9	6.225
154	009A	3.850	186	00BA	4.650	218	00DA	5.450	250	00FA	6.250
155	009B	3.875	187	00BB	4.675	219	00DB	5.475	251	00FB	6.275
156	009C	3.900	188	00BC	4.700	220	00DC	5.500	252	00FC	6.300
157	009D	3.925	189	00BD	4.725	221	00DD	5.525	253	00FD	6.325
158	009E	3.950	190	00BE	4.750	222	00DE	5.550	254	00FE	6.350
159	009F	3.975	191	00BF	4.775	223	00DF	5.575	255	00FF	6.375

Packaging Dimensions QFN6x6-38L, EP1_S

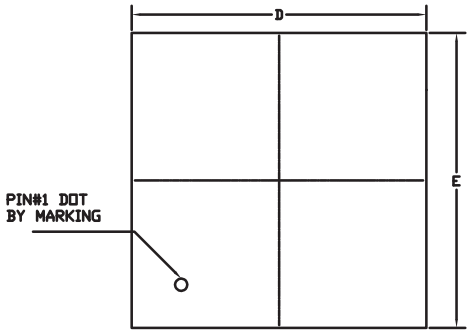

TOP VIEW

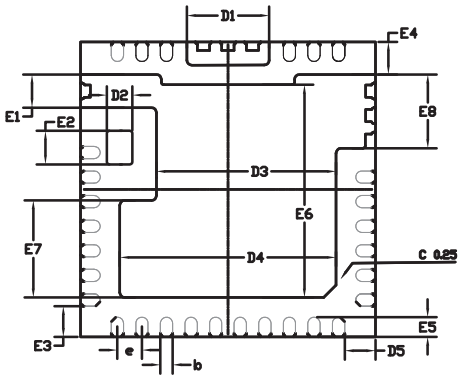

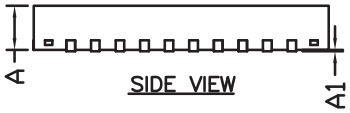

SIDE VIEW

RECOMMENDED LAND PATTERN

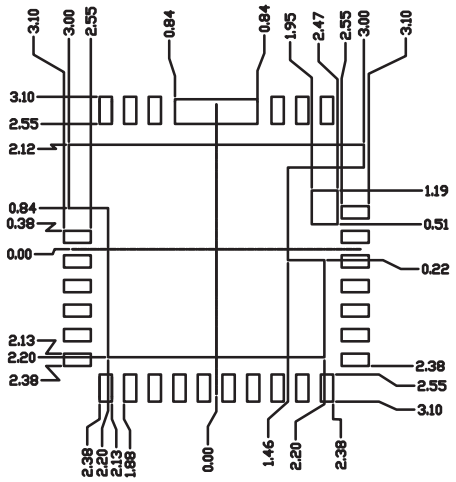

UNIT: mm

SYMBOLS	DIMENSIONS IN MM			DIMENSIONS IN INCHES		
	MIN	NOM	MAX	MIN	NOM	MAX
A	0.80	0.90	1.00	0.031	0.035	0.039
A1	0.00	---	0.05	0.000	----	0.002
A2	0.20REF			0.008REF		
b	0.20	0.25	0.30	0.008	0.010	0.012
D	5.90	6.00	6.10	0.232	0.236	0.240
D1	1.58	1.68	1.78	0.062	0.066	0.070
D2	0.47	0.52	0.57	0.019	0.020	0.022
D3	3.56	3.66	3.76	0.140	0.144	0.148
D4	4.30	4.40	4.50	0.169	0.173	0.177
D5	0.57	0.62	0.67	0.022	0.024	0.026
E	5.90	6.00	6.10	0.232	0.236	0.240
E1	0.62	0.67	0.72	0.024	0.026	0.028
E2	0.63	0.68	0.73	0.025	0.027	0.029
E3	0.57	0.62	0.67	0.022	0.024	0.026
E4	0.61	0.66	0.71	0.024	0.026	0.028
E5	0.35	0.40	0.45	0.014	0.016	0.018
E6	4.21	4.33	4.41	0.166	0.170	0.174
E7	1.88	1.98	2.08	0.074	0.078	0.082
E8	1.40	1.50	1.60	0.055	0.059	0.063
e	0.50REF			0.020REF		

NOTE
CONTROLLING DIMENSION IS MILLIMETER.
CONVERTED INCH DIMENSIONS ARE NOT NECESSARILY EXACT.

Tape and Reel, QFN6x6-38L, EP1_S

Carrier Tape

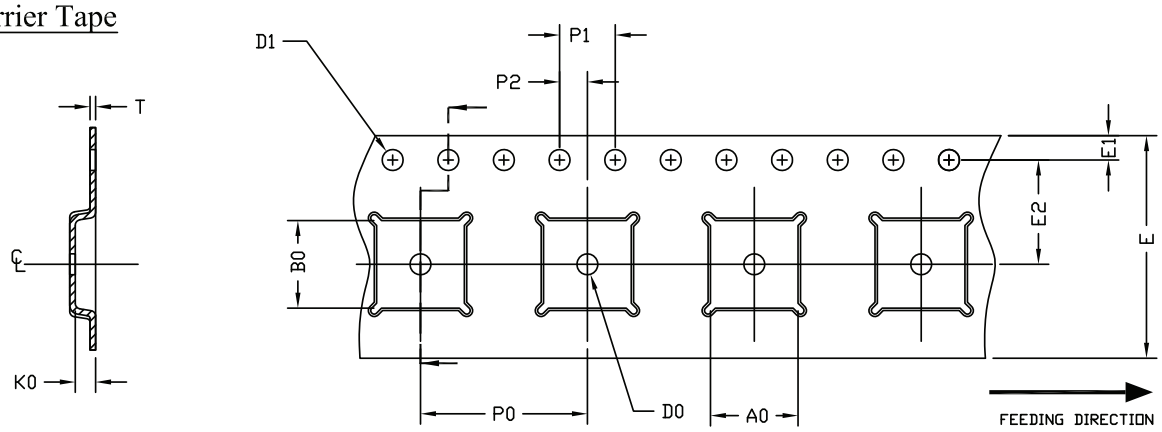

UNIT: MM

PACKAGE	A0	B0	K0	D0	D1	E	E1	E2	P0	P1	P2	T
QFN6x6 (16 mm)	6.30 ±0.20	6.30 ±0.20	1.10 ±0.20	1.50 MIN.	1.50 $^{+0.1}_{-0.0}$	16.0 ±0.3	1.75 ±0.10	7.5 ±0.1	12.00 ±0.20	4.00 ±0.20	2.00 ±0.10	0.30 ±0.05

Reel

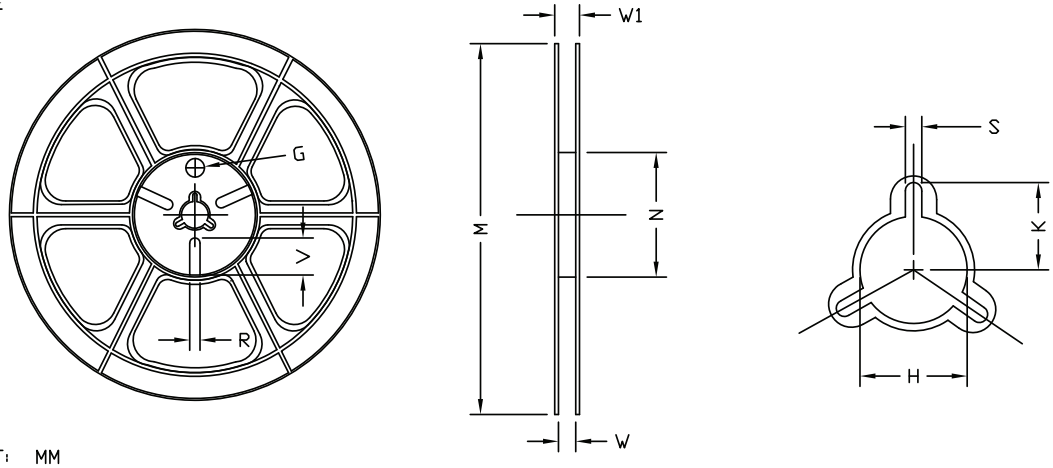

UNIT: MM

TAPE SIZE	REEL SIZE	M	N	W	W1	H	K	S	G	R	V
16 mm	ø330	ø330 MAX.	ø100 MIN.	16.4 $^{+2.0}_{-0.0}$	22.4 MAX.	ø13.0 $^{+0.5}_{-0.2}$	10.1 MIN.	1.5 MIN.	---	---	---

Tape

Leader / Trailer & Orientation

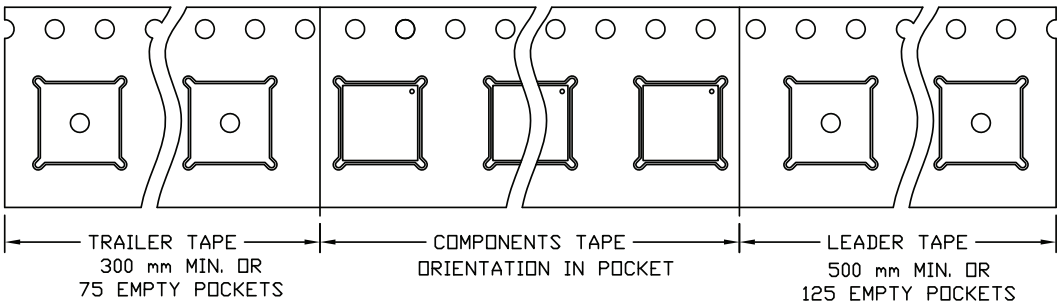

Part Marking

AOZ7648QI-16
(6mm x 6mm QFN)

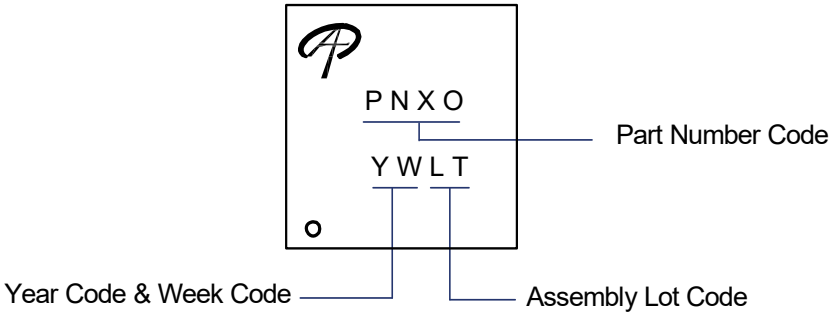

Part No.	Description	Code
AOZ7648QI-16	Green Product	AS0G

LEGAL DISCLAIMER

Applications or uses as critical components in life support devices or systems are not authorized. AOS does not assume any liability arising out of such applications or uses of its products. AOS reserves the right to make changes to product specifications without notice. It is the responsibility of the customer to evaluate suitability of the product for their intended application. Customer shall comply with applicable legal requirements, including all applicable export control rules, regulations and limitations.

AOS' products are provided subject to AOS' terms and conditions of sale which are set forth at:
http://www.aosmd.com/terms_and_conditions_of_sale

LIFE SUPPORT POLICY

ALPHA AND OMEGA SEMICONDUCTOR PRODUCTS ARE NOT AUTHORIZED FOR USE AS CRITICAL COMPONENTS IN LIFE SUPPORT DEVICES OR SYSTEMS.

As used herein:

1. Life support devices or systems are devices or systems which, (a) are intended for surgical implant into the body or (b) support or sustain life, and (c) whose failure to perform when properly used in accordance with instructions for use provided in the labeling, can be reasonably expected to result in a significant injury of the user.

2. A critical component in any component of a life support, device, or system whose failure to perform can be reasonably expected to cause the failure of the life support device or system, or to affect its safety or effectiveness.